KILN APARTMENTS

Lessons Learned

GBD

1. Project Overview
2. PH Strategies
3. Lessons Learned

GBD

GBD

Passive house + LEED
74% energy savings
Wood frame modules

LEED
25% energy savings

GBD

STELLLAR APARTMENTS EUGENE, OR

- 6 units of 54-unit affordable housing apts
- Individual HRVs
- Electric baseboard heat
- 4” Polyiso exterior insulation

GBD

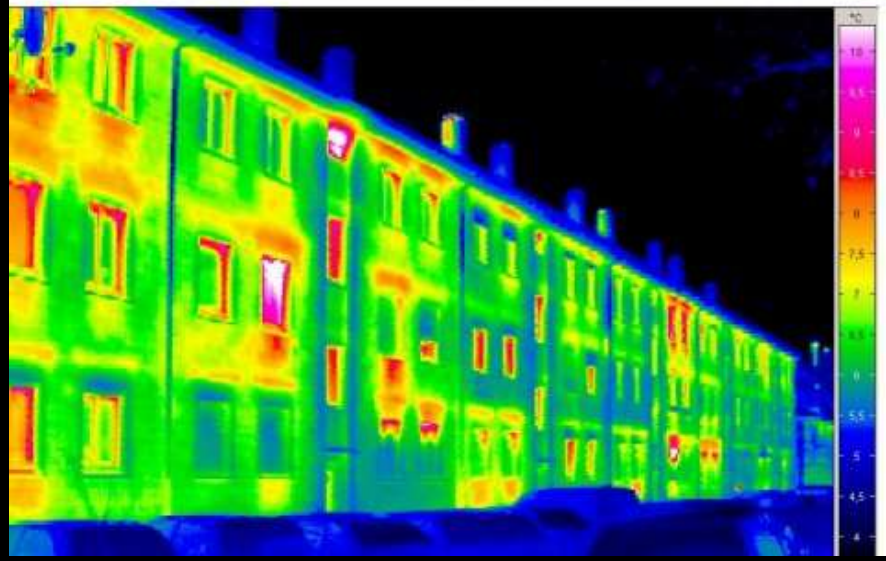

GBD

2. Kiln Apartments

GBD

Site

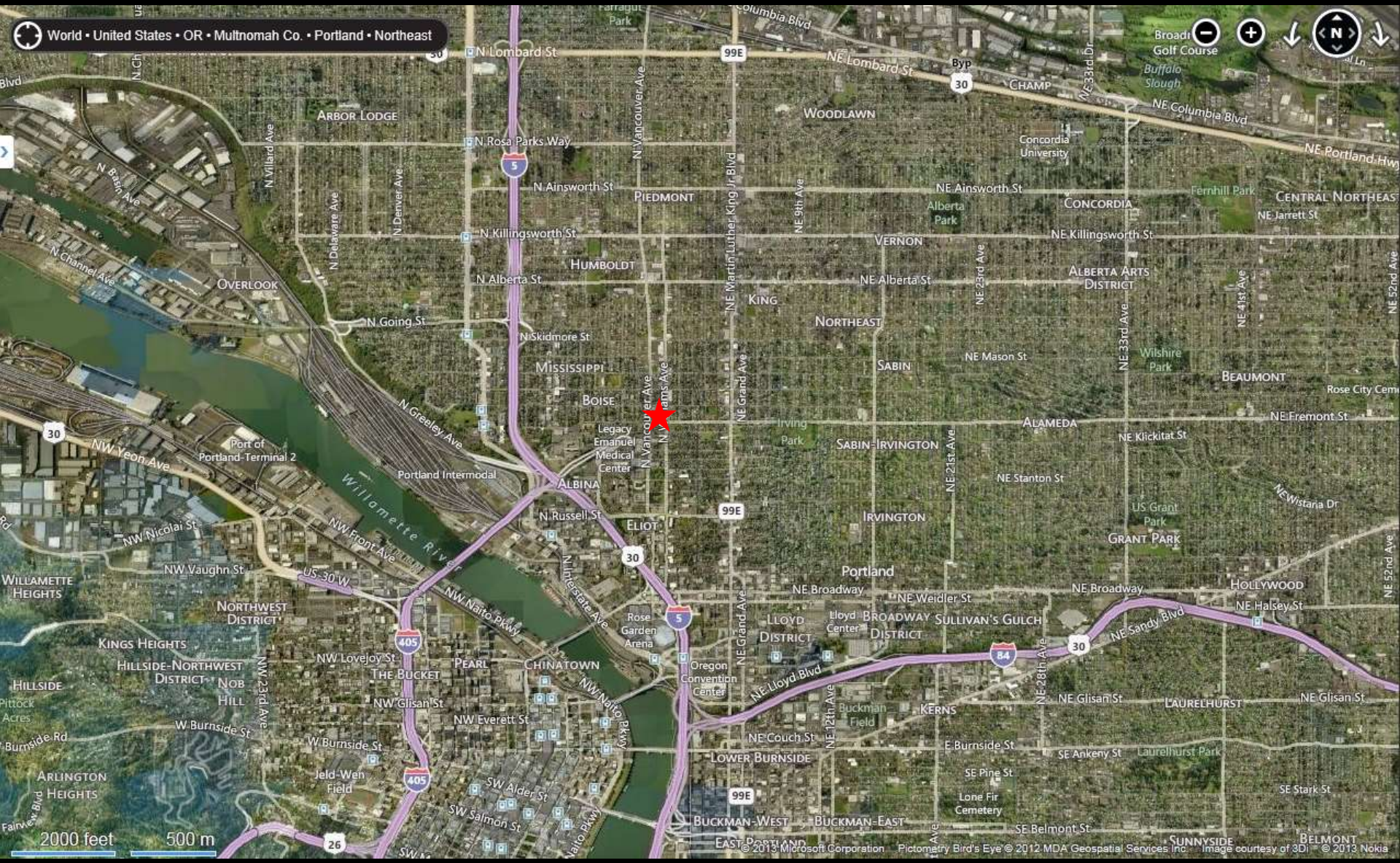
World • United States • OR • Multnomah Co. • Portland • Northeast
N Lombard St
NE Lombard St
NE Columbia Blvd
NE Portland Hwy
ARBOR LODGE
WOODLAWN
CHAMP
Concordia University
N Rosa Parks Way
N Ainsworth St
NE Ainsworth St
PIEDMONT
CONCORDIA
Fernhill Park
CENTRAL NORTHEAST
NE Jarrett St
N Killingsworth St
NE Killingsworth St
VERNON
HUMBOLDT
N Alberta St
NE Alberta St
ALBERTA ARTS DISTRICT
OVERLOOK
KING
NORTHEAST
N Going St
N Skidmore St
MISSISSIPPI
SABIN
NE Mason St
Wilshire Park
BEAUMONT
BOISE
N Greeley Ave
Legacy Emanuel Medical Center
ALAMEDA
NE Fremont St
NE Klickitat St
Irving Park
SABIN-IRVINGTON
Port of Portland-Terminal 2
NW Yeon Ave
Portland Intermodal
ALBINA
NE Stanton St
Willamette River
N Russell St
ELIOT
IRVINGTON
US Grant Park
GRANT PARK
NW Nicolai St
NW Front Ave
NW Vaughn St
US 30 W
WILLAMETTE HEIGHTS
Portland
NE Broadway
NE Weidler St
HOLLYWOOD
NE Halsey St
NORTHWEST DISTRICT
NW Naito Pkwy
Rose Garden Arena
LLOYD DISTRICT
Lloyd Center
BROADWAY DISTRICT
SULLIVAN'S GULCH
NE Sandy Blvd
KINGS HEIGHTS
HILLSIDE-NORTHWEST DISTRICT
NW Lovejoy St
THE BUCKET
PEARL
CHINATOWN
Oregon Convention Center
NE Lloyd Blvd
HILLSIDE
NOB HILL
NW Glisan St
NW Everett St
KERNS
NE Glisan St
LAURELHURST
W Burnside St
NE Couch St
E Burnside St
LOWER BURNSIDE
SE Ankeny St
Laurelhurst Park
ARLINGTON HEIGHTS
Jeld-Wen Field
SW Alder St
SW Salmon St
SE Pine St
Lone Fir Cemetery
SE Stark St
BUCKMAN-WEST
BUCKMAN-EAST
SE Belmont St
SUNNYSIDE
BELMONT
2000 feet
500 m
© 2013 Microsoft Corporation
Pictometry Bird's Eye © 2012 MDA Geospatial Services Inc
Image courtesy of 3Di
© 2013 Nokia

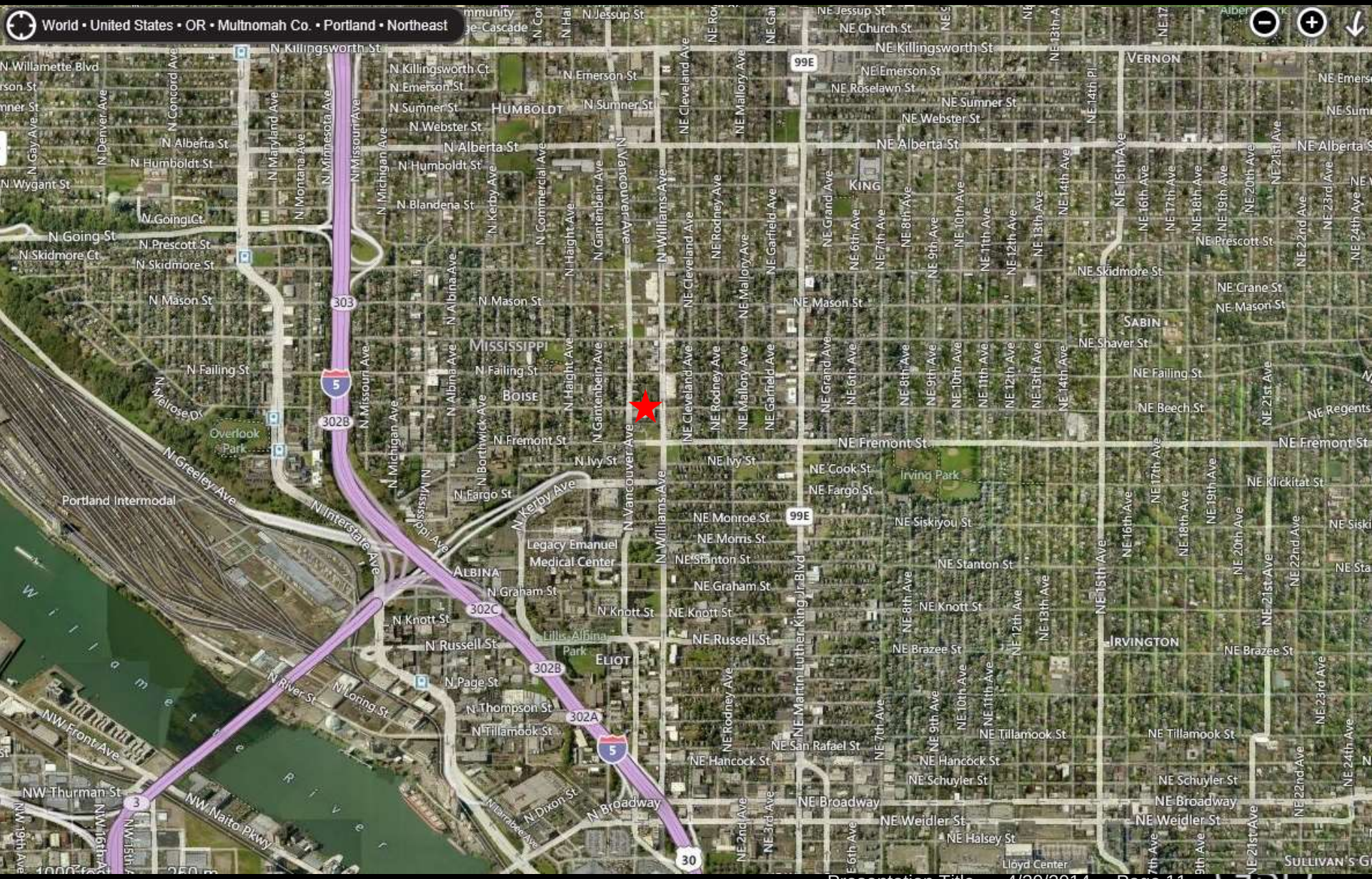
World • United States • OR • Multnomah Co. • Portland • Northeast
N Killingsworth St
NE Killingsworth St
N Willamette Blvd
N Denver Ave
N Concord Ave
N Maryland Ave
N Montana Ave
N Minnesota Ave
N Missouri Ave
N Michigan Ave
N Killingsworth Ct
N Emerson St
N Sumner St
N Webster St
HUMBOLDT
N Alberta St
N Humboldt St
N Blandena St
N Kerby Ave
N Commercial Ave
N Haight Ave
N Gantenbein Ave
N Vancouver Ave
N Williams Ave
N Cleveland Ave
NE Rodney Ave
NE Mallory Ave
NE Garfield Ave
NE Grand Ave
NE Jessup St
NE Church St
NE Emerson St
NE Roselawn St
NE Sumner St
NE Webster St
NE Alberta St
KING
VERNON
NE 6th Ave
NE 7th Ave
NE 8th Ave
NE 9th Ave
NE 10th Ave
NE 11th Ave
NE 12th Ave
NE 13th Ave
NE 14th Ave
NE 15th Ave
NE 16th Ave
NE 17th Ave
NE 18th Ave
NE 19th Ave
NE 20th Ave
NE 21st Ave
NE 22nd Ave
NE 23rd Ave
NE 24th Ave
NE Prescott St
NE Skidmore St
NE Crane St
NE Mason St
SABIN
NE Shaver St
NE Failing St
NE Beech St
NE Regents
NE Fremont St
NE Klickitat St
NE Siskiyou St
NE Stanton St
NE Knott St
NE Brazee St
IRVINGTON
NE Tillamook St
NE Hancock St
NE Schuyler St
NE Broadway
NE Weidler St
NE Halsey St
Lloyd Center
SULLIVAN'S G
99E
N Going St
N Going Ct
N Prescott St
N Skidmore St
N Mason St
303
MISSISSIPPI
N Failing St
BOISE
N Fremont St
N Ivy St
N Fargo St
N Melrose Dr
Overlook Park
N Greeley Ave
Portland Intermodal
N Interstate Ave
N Mississippi Ave
N Bortwick Ave
N Albina Ave
N Kerby Ave
Legacy Emanuel Medical Center
ALBINA
N Graham St
N Knott St
302C
N Russell St
Lillis-Albina Park
ELIOT
302B
N Page St
N Thompson St
N Tillamook St
302A
N River St
N Loring St
NW Front Ave
NW Thurman St
NW Naito Pkwy
N Dixon St
N Broadway
N Martin Luther King Jr Blvd
NE Monroe St
NE Morris St
NE Cook St
NE Fargo St
NE Ivy St
NE Graham St
NE Knott St
NE Russell St
NE San Rafael St
NE Hancock St
NE Tillamook St
NE Broadway
NE Weidler St
Irving Park
Willamette River
5
3
30

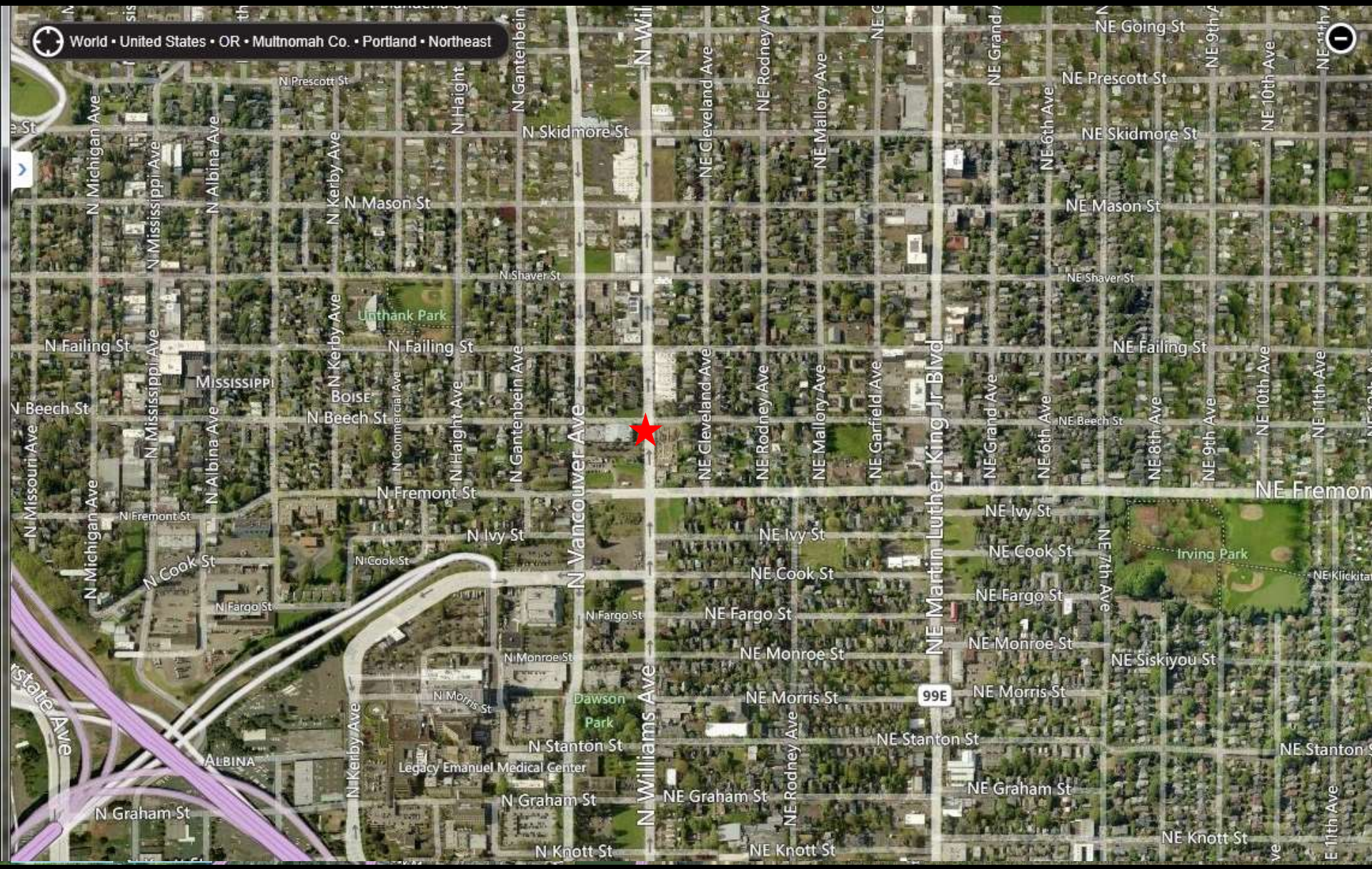
World • United States • OR • Multnomah Co. • Portland • Northeast
N Prescott St
N Skidmore St
N Mason St
N Shaver St
Unthank Park
N Failing St
N Beech St
N Fremont St
N Ivy St
N Cook St
N Fargo St
N Monroe St
N Morris St
N Stanton St
N Graham St
N Knott St
N Michigan Ave
N Mississippi Ave
N Albina Ave
N Kerby Ave
N Haight
N Gantenbein
N Vancouver Ave
N Williams Ave
NE Cleveland Ave
NE Rodney Ave
NE Mallory Ave
NE Garfield Ave
NE Martin Luther King Jr Blvd
NE Grand Ave
NE 6th Ave
NE 8th Ave
NE 9th Ave
NE 10th Ave
NE 11th Ave
NE 7th Ave
NE Going St
NE Prescott St
NE Skidmore St
NE Mason St
NE Shaver St
NE Failing St
NE Beech St
NE Fremont
NE Ivy St
NE Cook St
NE Fargo St
NE Monroe St
NE Siskiyou St
NE Morris St
NE Stanton St
NE Graham St
NE Knott St
Irving Park
Dawson Park
Legacy Emanuel Medical Center
MISSISSIPPI
BOISE
ALBINA
99E

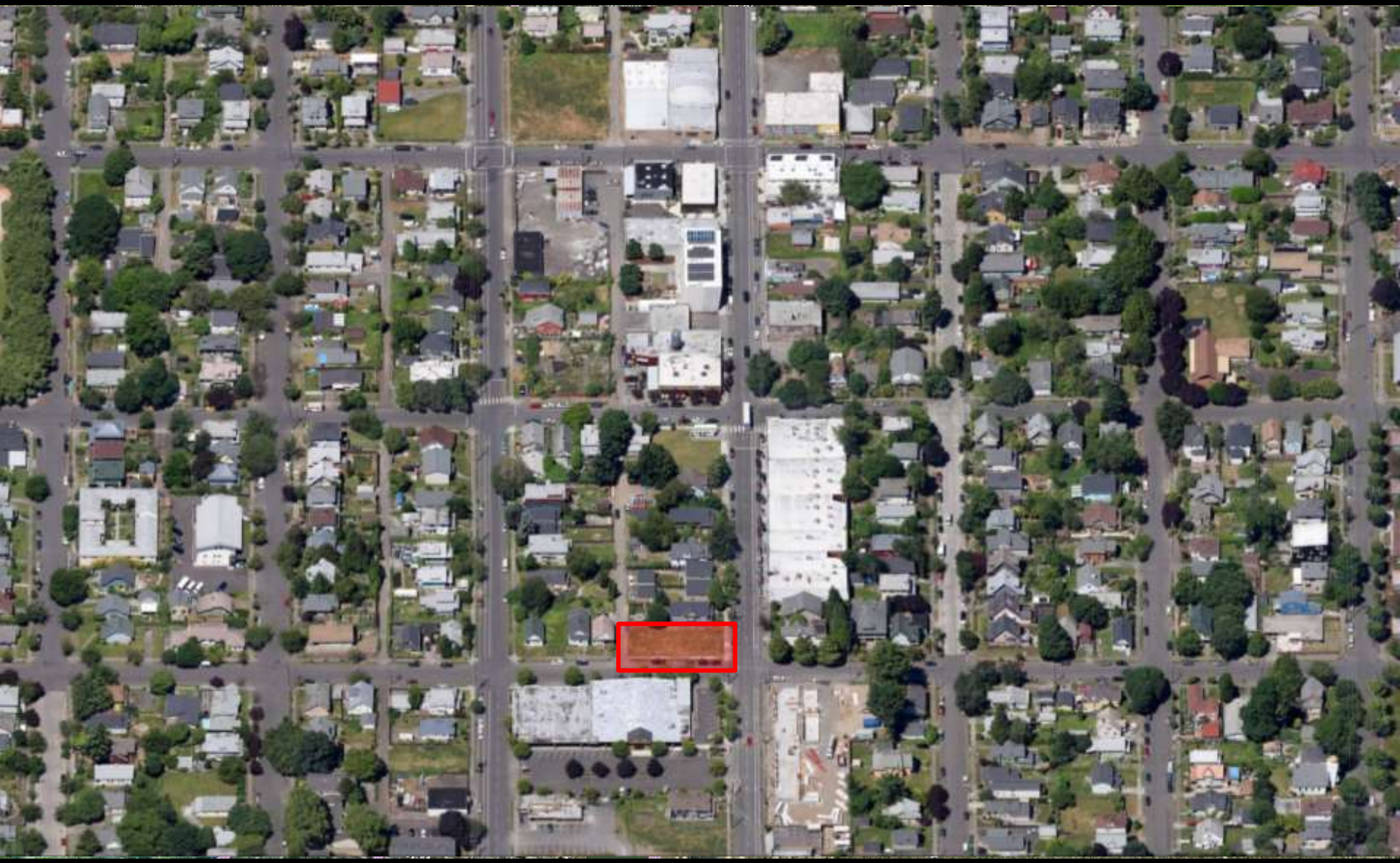

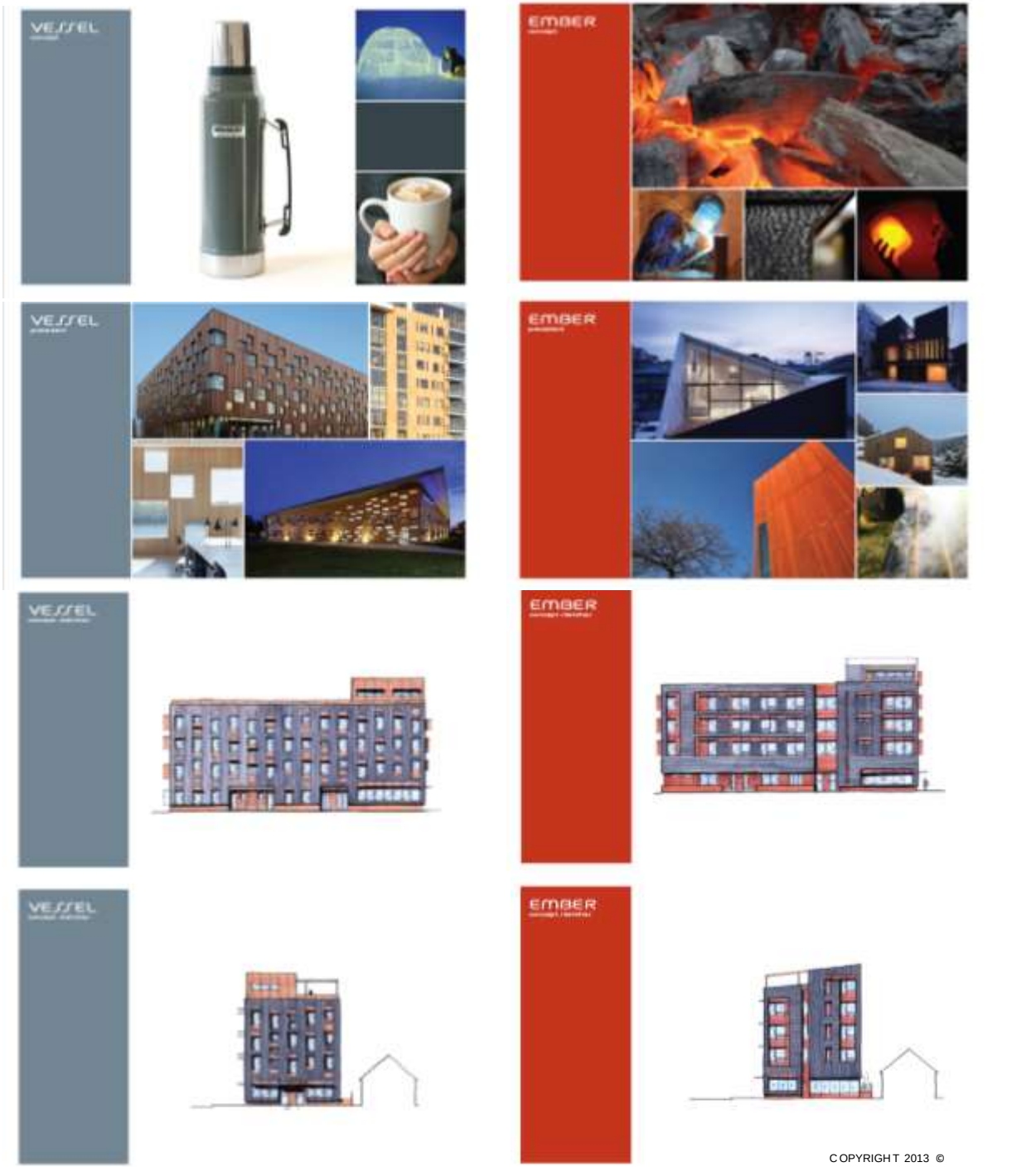

DESIGN CONCEPTS

GBD

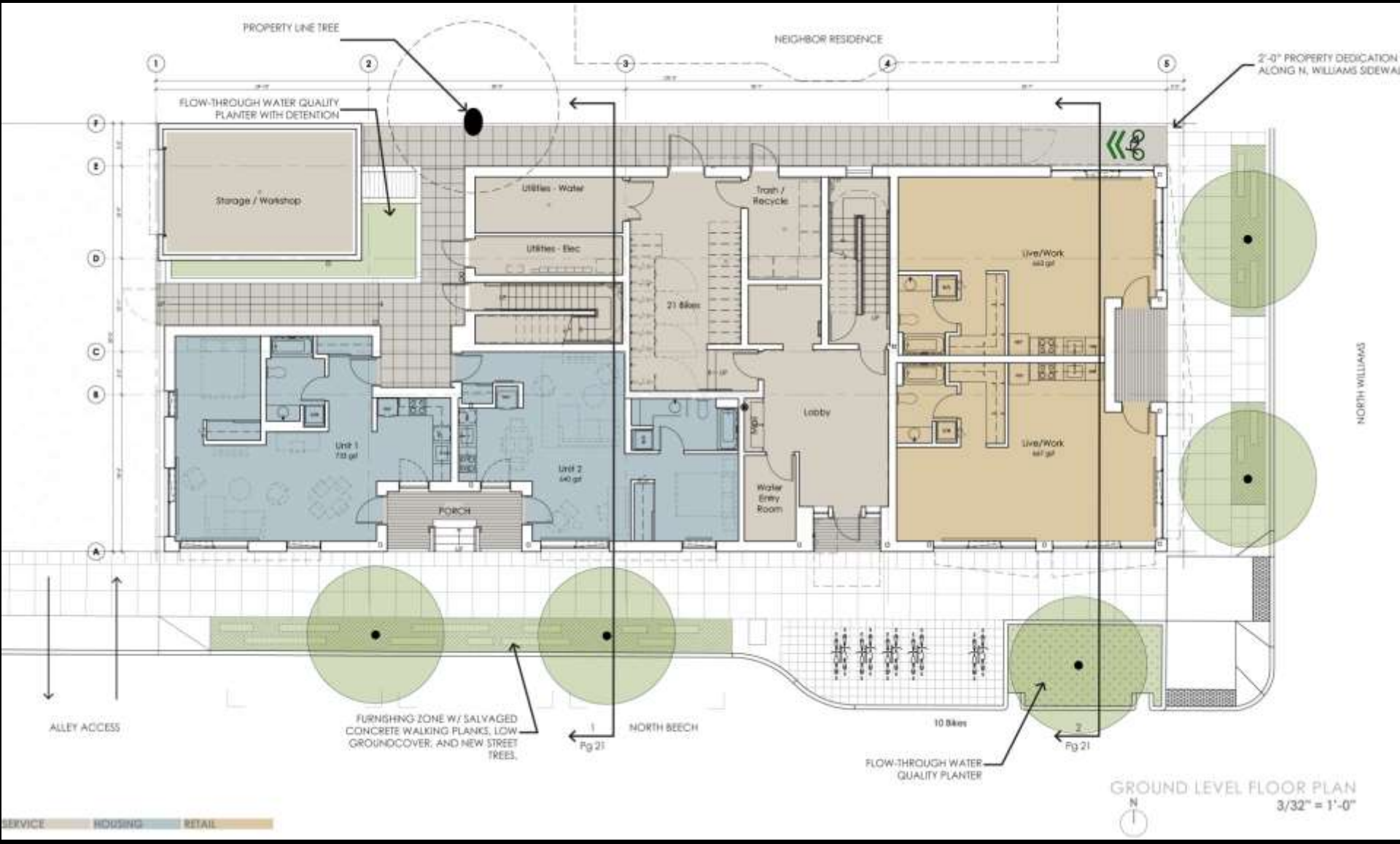

GROUND LEVEL FLOOR PLAN
3/32" = 1'-0"

GBD

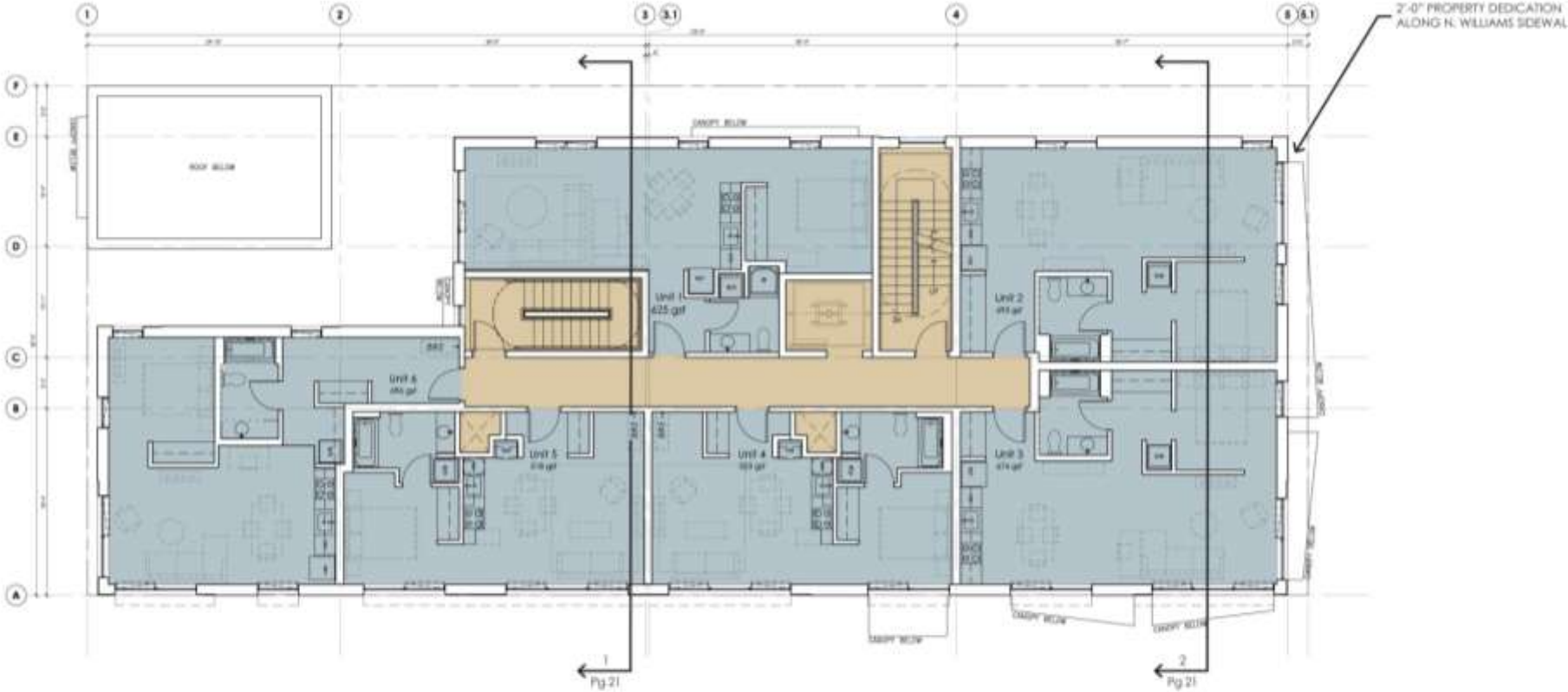

BIKE PARKING (LOWER TERRACE)

LEVEL 02:	3
LEVEL 03:	3
SUBTOTAL:	6

SERVICE HOUSING RETAIL

SECOND AND THIRD LEVEL FLOOR PLANS

N

3/32" = 1'-0"

GBD

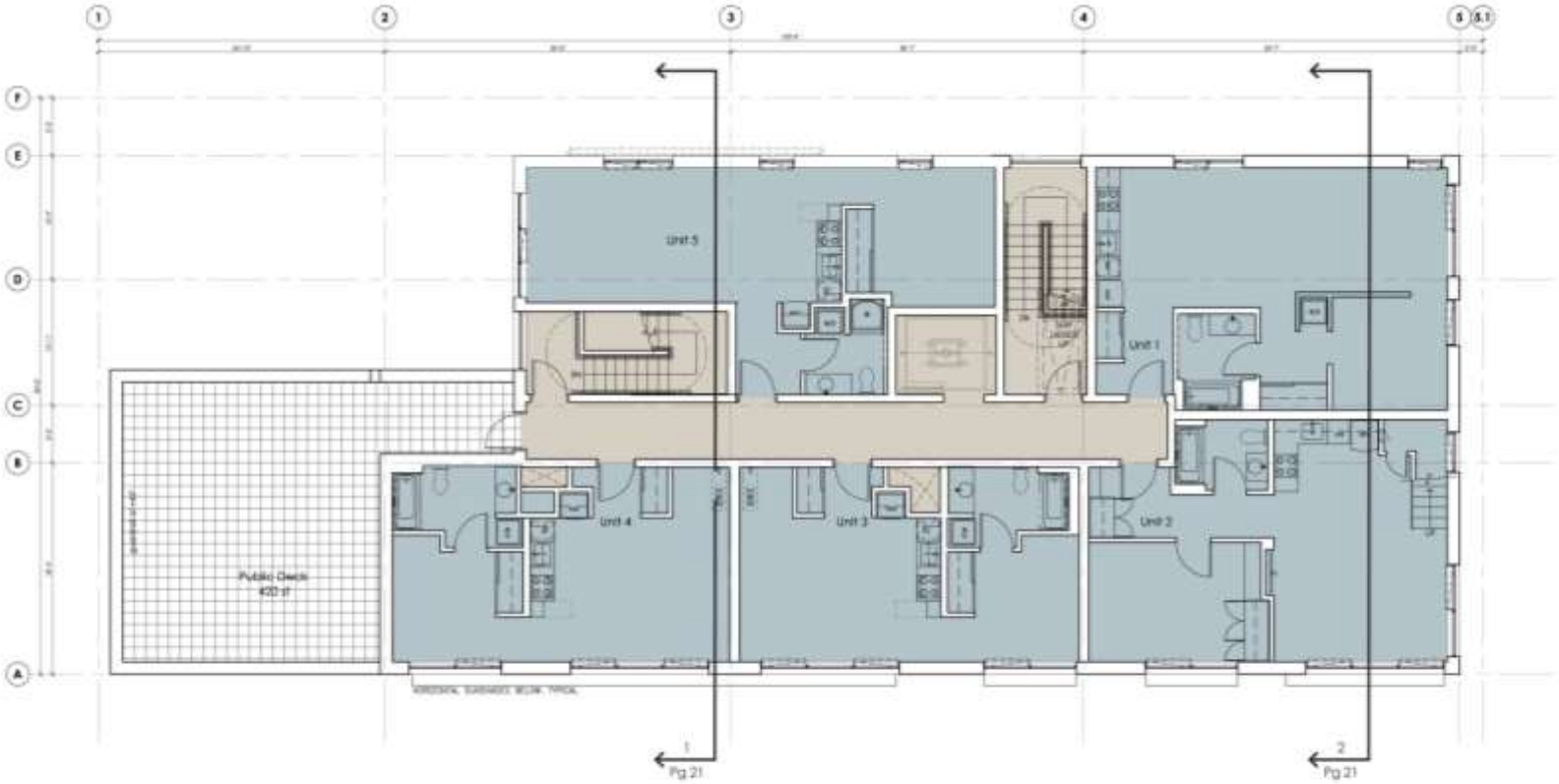

BIKE PARKING (LONG TERM)

LEVEL 04:	2
SUBTOTAL:	2

SERVICE HOUSING RETAIL

FOURTH LEVEL FLOOR PLAN

N

3/32" = 1'-0"

GBD

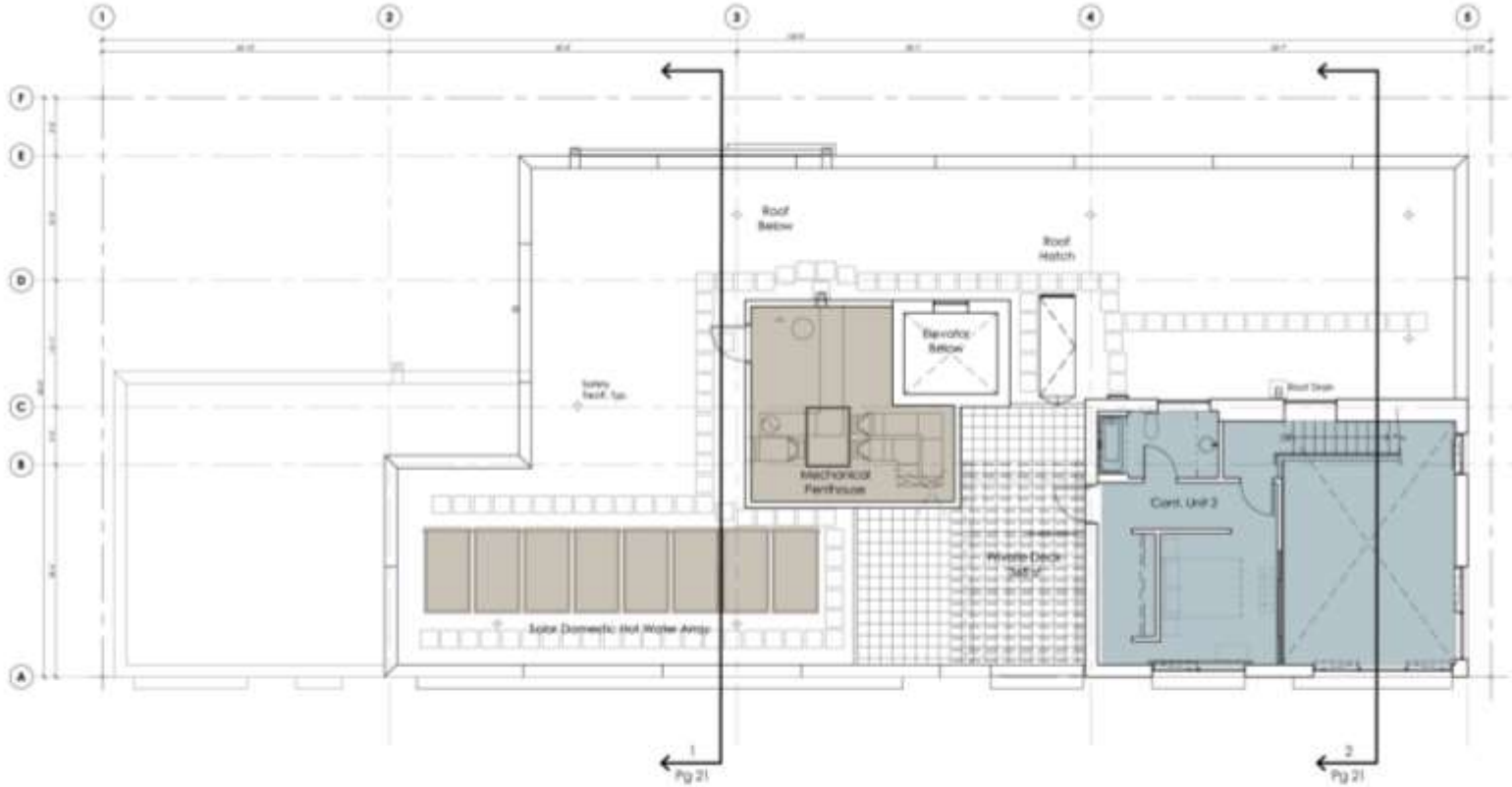

FIFTH LEVEL FLOOR PLAN
3/32" = 1'-0"

SERVICE HOUSING RETAIL

GBD

GBD

GBD

3. PH Strategies

GBD

ULTRA HIGH PERFORMING WINDOWS

The “weakest” link in any exterior envelope is the window. Meeting the Passive House standard often requires very high performing windows with insulated or thermally broken frames and triple panes of glass.

Note: a key element to consider is amount of exterior glazing: more % glazing requires high performing windows.

GBD

SYSTEMS ANALYSIS TO MEET PASSIVE HOUSE ENERGY MODEL

	PE(source EUI)	Fuels	Solar panels	Solar storage	Refrigerator	Estimate
Base	44.12	Gas DHW, Electric heat (electric resistance)	8	300	conventional	
Case 1	37.36	Gas DHW, Gas heat (hydronic system)	8	400	conventional	
Case 1A	36.08	Gas DHW, Gas heat	8	400	RF-19	
Case 1B	37.33	Gas DHW, Gas heat	5	250	RF-19	
Retail	42.36	Gas DHW, Gas heat	8	400	conventional	
Retail	41.20	Gas DHW, Gas heat	8	400	RF-19	
Retail	38.77	Gas DHW, Gas heat	8	400	RF-12	
Retail	38.23	Gas DHW, Wood heat (hydronic system)	8	400	conventional	
Retail	37.07	Gas DHW, Wood heat	8	400	RF-19	
Case 2	35.04	Gas DHW, Wood heat	4	200	conventional	
Case 3	35.56	Heat 100% Wood. DHW 60/40% gas/wood	0	0	conventional	
Case 4	31.45	Wood DHW, Wood heat	0	0	conventional	

Notes
1 Red numbers indicate an EUI that does not meet Passive House certification (needs to be less than 38.0)
2 Conventional refrigerator refers to an energy efficient refrigerator (Energy Star). Assume $1000
3 RF-19 refrigerators indicate Sunfrost ultra-efficient 19 cubic ft. Retail is $3215. Add of ~$45k
4 RF-12 refrigerators indicate Sunfrost ultra-efficient 12 cubic ft. Retail is $2370. Add of ~$30k
5 PE (source EUI) is a measure of energy taking into account a 2.7 factor when electricity is delivered from a power plant

A significant difference between a standard such as LEED and Passive House is energy reduction strategies are black and white vs gradations with LEED.

With Passive House, the building either meets the energy consumption criteria or it does not. As a result, the analysis is much more definitive.

Analysis during design phase to find a path to being below the required source EUI of 38.0 to meet Passive House criteria.

GBD

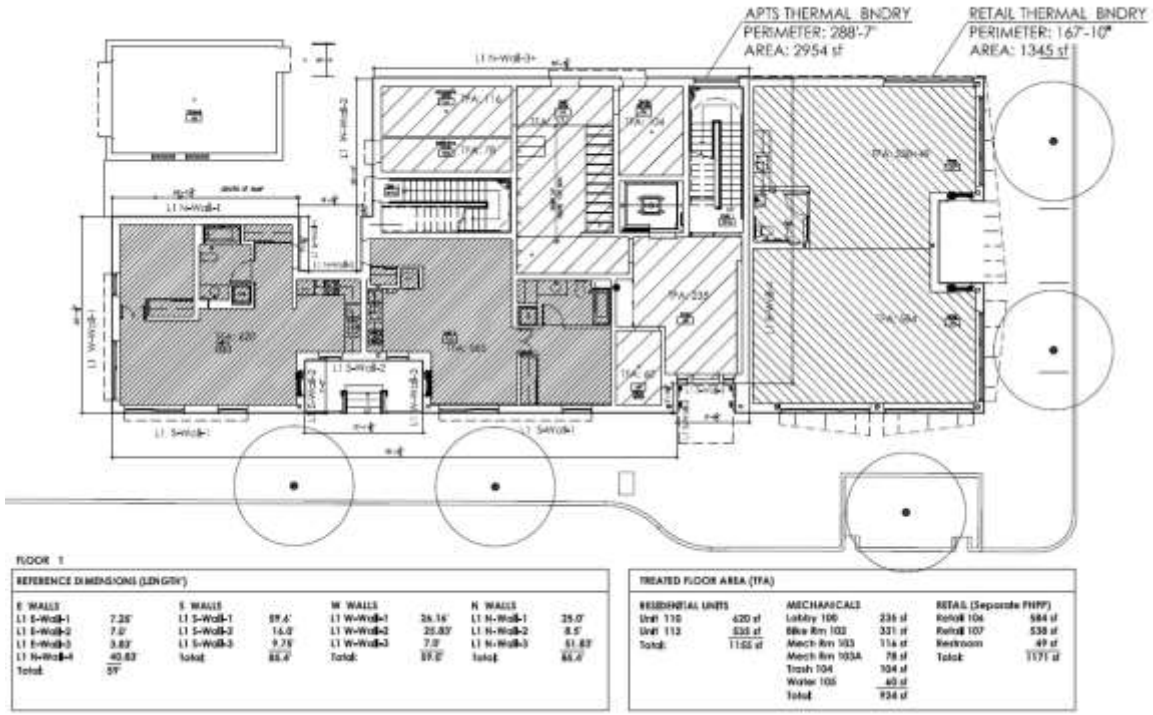

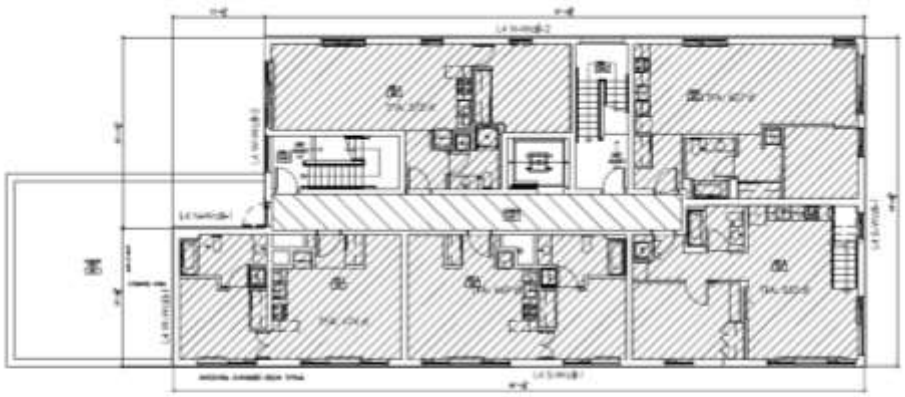

THERMAL BNDRY
PERIMETER: 277'-10"
AREA: 3890 sf

TREATED FLOOR AREA (TFA)

Floor plan describing different floor areas and types of uses for Pre-Certification.

MULTI-FAMILY HOUSING

TREATED FLOOR AREA (TFA)

Exclude stairs, elevator;

60%:

Hallways, lobby, mechanical rooms, bike storage, trash room.

GBD

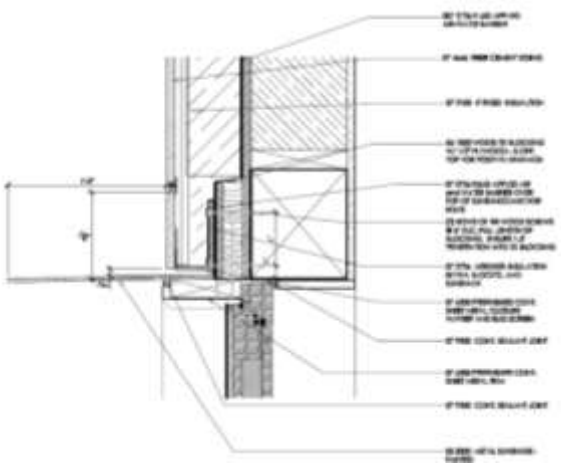

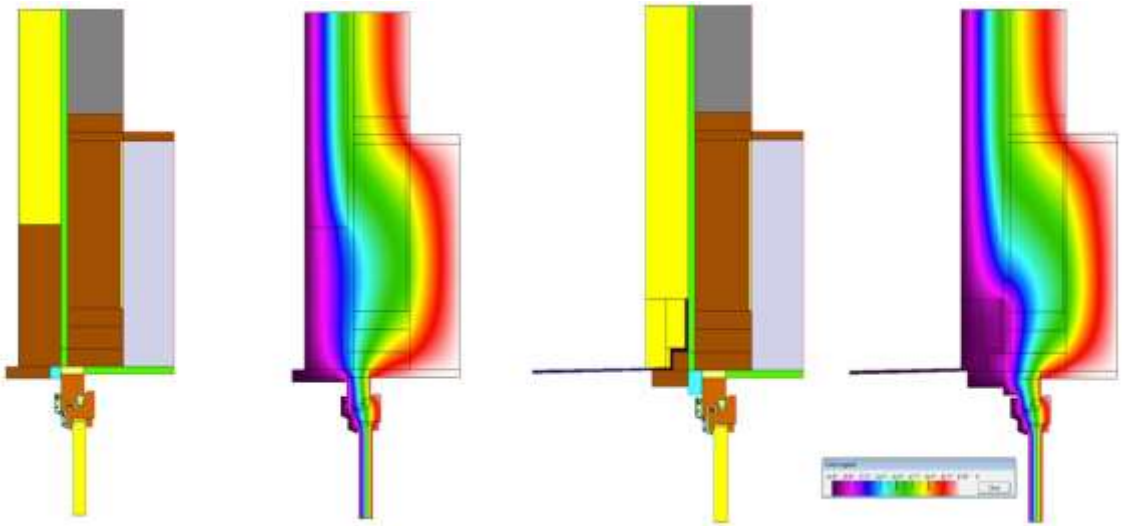

DETAILED ANALYSIS OF INDIVIDUAL ELEMENTS

Many of the architectural design elements required careful analysis to conform with the Passive House energy model.

This is an example of just one of those conditions that required additional evaluation. Others included:

- Foundation
- Moment Frame steel
- Roof

Architectural detailing of metal sunshade and subsequent analysis of thermal bridging and impact to energy model.

GBD

Example showing the level of care required for Passive House construction – in this example, underground insulation with gaps greater than ¼" were required to be spray foamed.

OBSERVATIONS ABOUT CONSTRUCTION

For a mixed-use commercial building, the level of care and quality is significantly different than a "typical" commercial building. To date, almost all of the Passive House buildings in the NW have been homes and many of those have been built by either the designer or very small construction crews.

It is different to build with a crew of a dozen vs a crew of many dozens.

GBD

FULL BUILDING PRELIMINARY BLOWER DOOR TEST

Images during preliminary full building blower door test. Achieving the strict envelope requirements, the size of holes being looked for are very small.

GBD

4. Lessons Learned

GBD

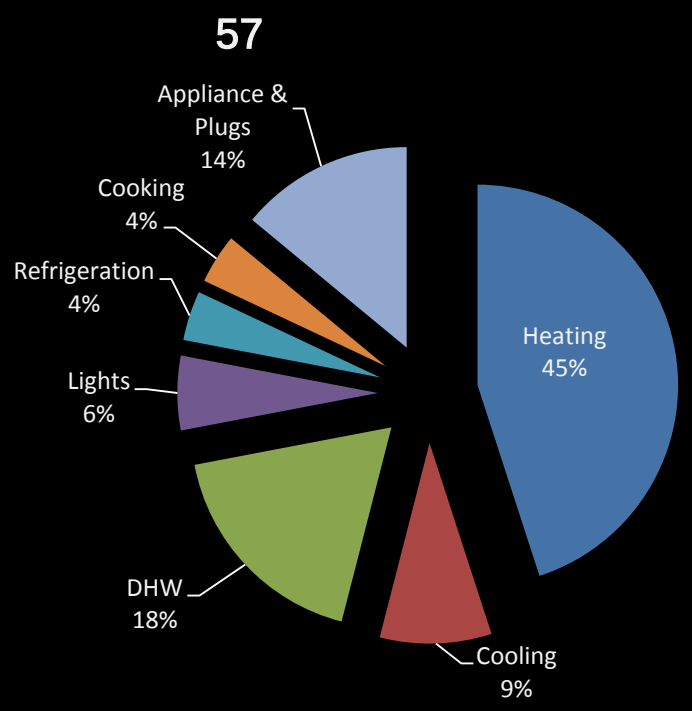

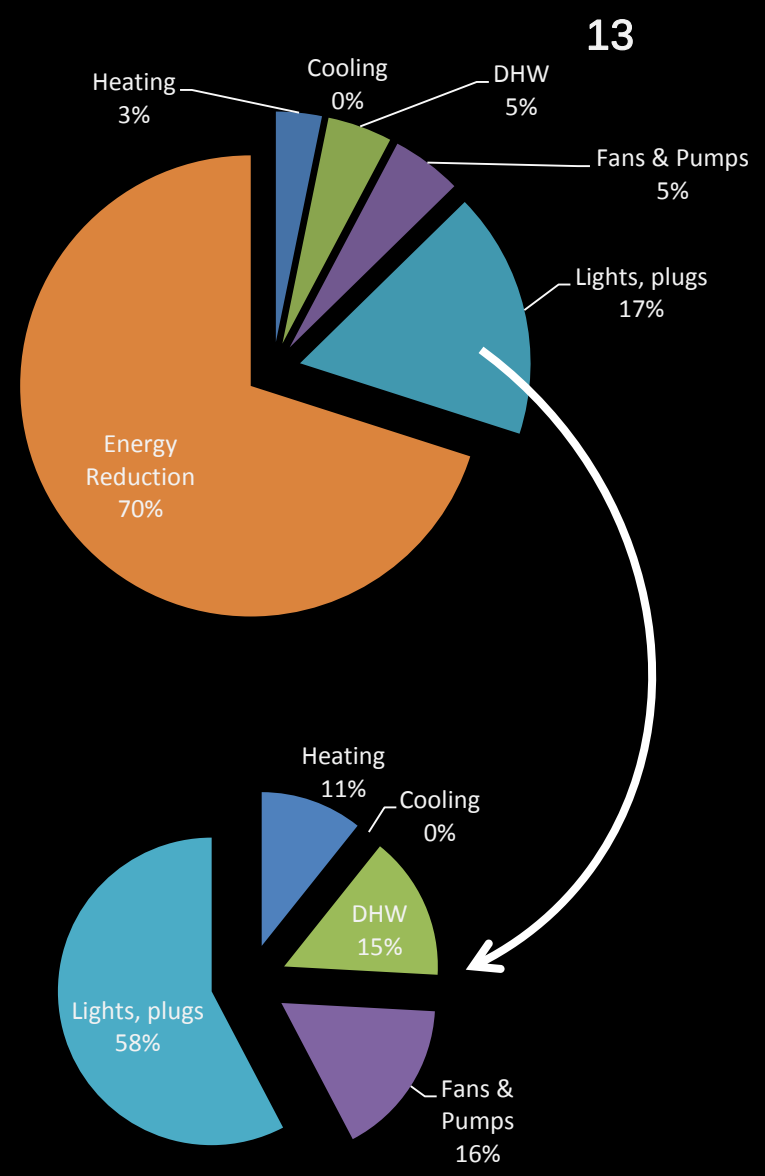

LESSONS LEARNED

1. Skin to volume ratio has major impact
2. Orientation and massing impact
3. High performing windows - most bang for the buck
4. Simplify slab or exclude ground floor space from thermal envelope
5. Reduce glazing on east/west
6. Unit size

Typical floor plan at the Janey.

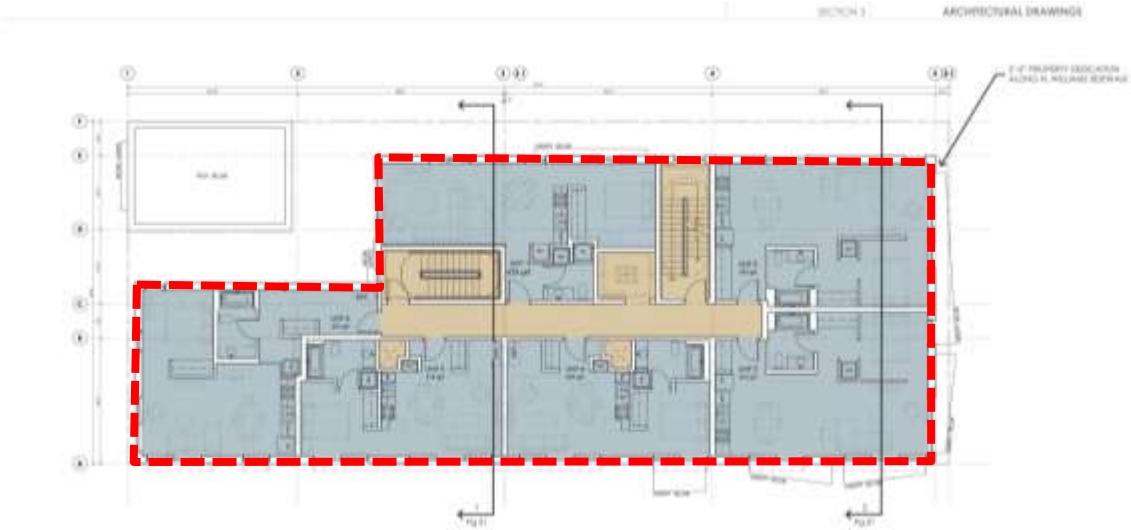

Typical floor plan at Kiln Apartments.

LESSON #1

SKIN TO VOLUME RATIO 4.9 VS 7.9

This ratio describes the amount of exterior envelope vs amount of interior volume. Historically, we have always thought about this ratio from a cost of construction point of view. However, the ratio has a much larger impact in a passive house because the heat loss through the skin is the dominant driver of energy use.

GBD

LESSON #2

ORIENTATION AND MASSING

Both the Janey and Kiln have optimal solar orientation – broad sides of the building face north/south.

Out of curiosity, we ran the energy model rotating Janey 90 degrees to assess impact.

That rotation resulted in a building consuming 30% more energy. That would be significant to overcome (…cost more money).

GBD

LESSON #3
MOST COST EFFECTIVE DESIGN STRATEGIES

The analysis performed (Janey vs Janey Passive) was fundamentally about identifying:

1. Janey Passive Strategies
2. Most cost effective strategies based on $/% energy reduction
3. Most cost effective Janey Scheme

1. HIGH PERFORMING WINDOWS
   $132,500, 103% REDUCTION, $1,290 PER 1% ENERGY
2. INSULATING GROUND FLOOR SPACES
   $9,137, 42.5% REDUCTION, $215 PER 1% ENERGY
3. PROVIDING HEAT RECOVERY VENTILATION
   $127,500, 29% REDUCTION, $4,397 PER 1% ENERGY
4. ADDING EXTERIOR WALL INSULATION
   $39,902, 15% REDUCTION, $2,670 PER 1% ENERGY
5. ADDING ROOF INSULATION
   $13,930, 8% REDUCTION, $1,788 PER 1% ENERGY

Note: Some strategies are givens; for example, the building couldn't perform without a heat recovery or energy recovery ventilator.

GBD

View of concrete structural foundation showing insulation under footings.

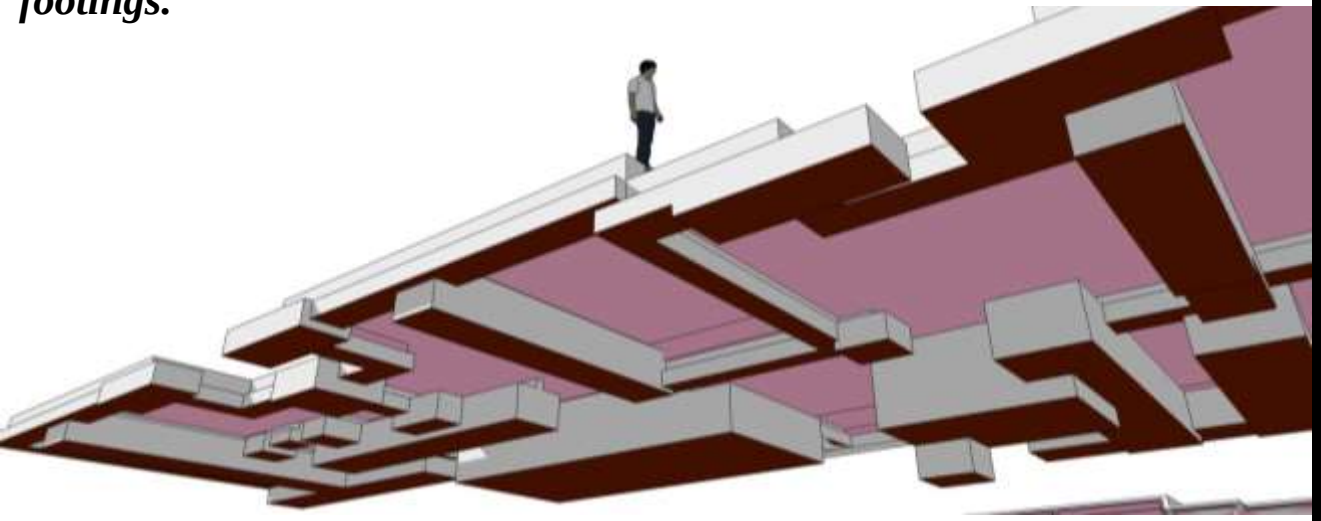

Rendering of complexity of concrete structural foundation at Kiln

LESSON #4

EXCLUDE GROUND FLOOR SPACE FROM THERMAL ENVELOPE

The amount of below grade insulation at Kiln was very difficult to install and expensive. All of that could be avoided in a 5 over 1 strategy.

There are many advantages of this approach:

1. Flexibility
2. Construction Cost
3. Simplified Foundations

GBD

View of SW corner of the Janey. East elevation party wall - 0% glazing. West Elevation looks like a lot of glazing, but there is very little – 24%.

LESSON #5

REDUCE EAST / WEST GLAZING

The Janey has significantly more glazing overall than Kiln (32% vs 23%). However, the amount of glazing on the east/west is half of Kiln.

East/West glazing is difficult to control in the Summer (overheat the apartments) and doesn't give as much benefit in the Winter (passive heat source).

GBD

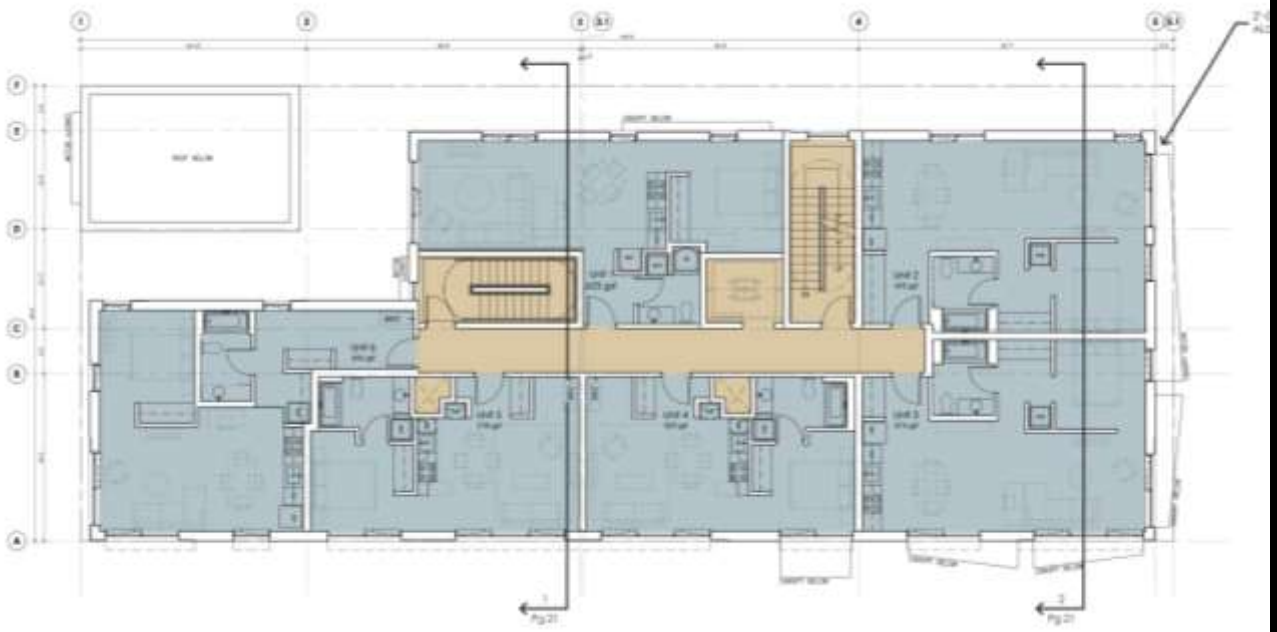

Typical floor plan at Kiln Apartments.

Note: of the 6 units per a typical floor, 4 are corner units.

LESSON #6

AVERAGE UNIT SIZE IS NOT AS CRITICAL AS ORIGINALLY ASSUMED

The average unit size does make a difference as the energy modeling makes plug load assumptions based on number of occupants. However, it is not nearly as important as assumed. Varying the number of units in the Kiln energy model changed the energy consumption between 5-10%. Though significant, compared to other inputs, that is not a key driver.

GBD

THE PASSIVE HOUSE STANDARD
A FEW OTHER OBSERVATIONS

1. Cladding Attachment
2. Unvented Roof, Parapet Air Sealing
3. Moisture management
4. Construction schedule (implication of blower door test)
5. Design process observations

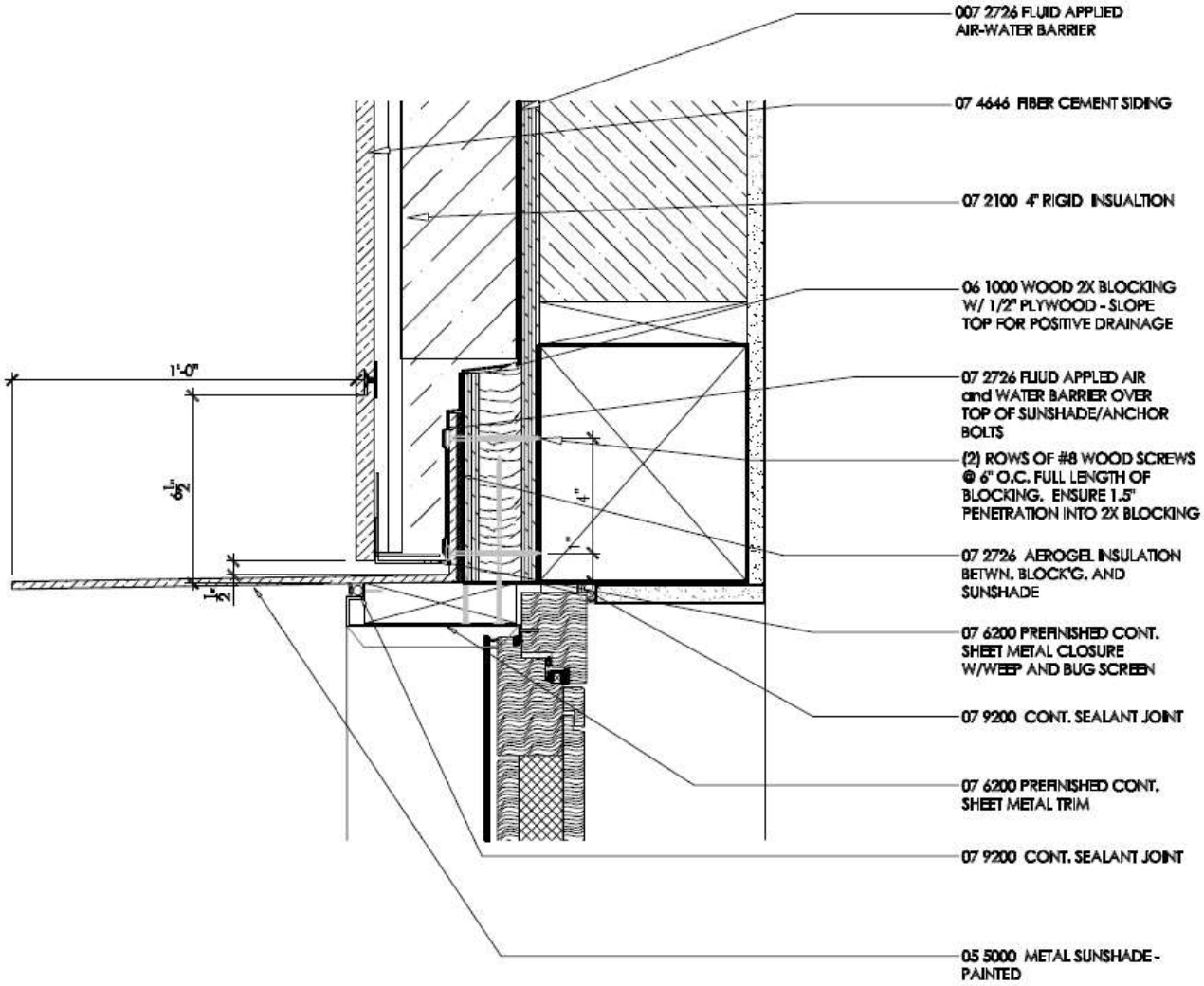

34 DOOR HEAD @ FIBER CEMENT SIDING

3" = 1'-0"

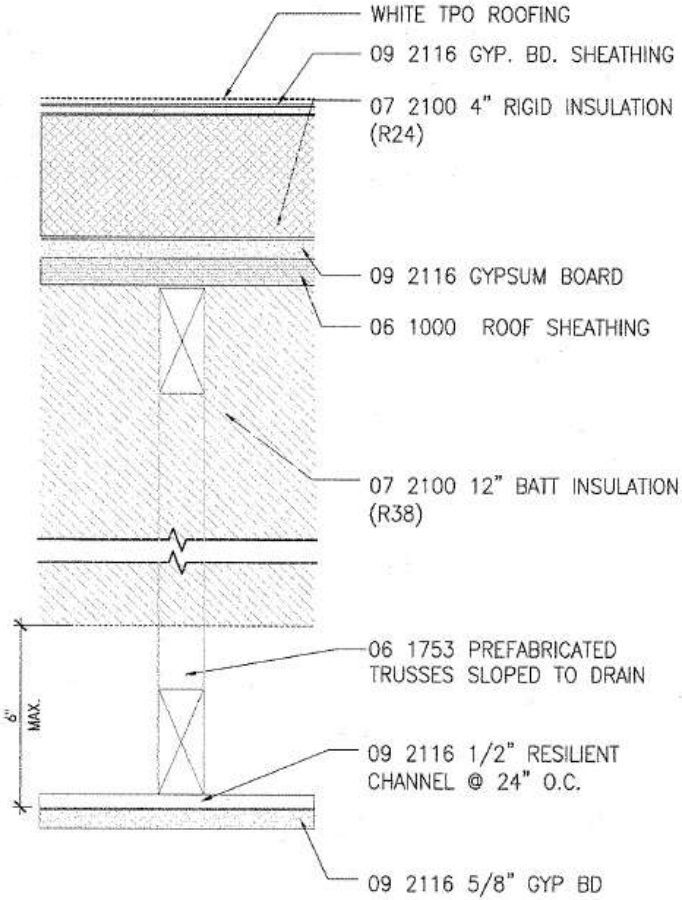

20 **ROOF ASSEMBLY**
UL: 263 Design No. P522 1 hr RATED

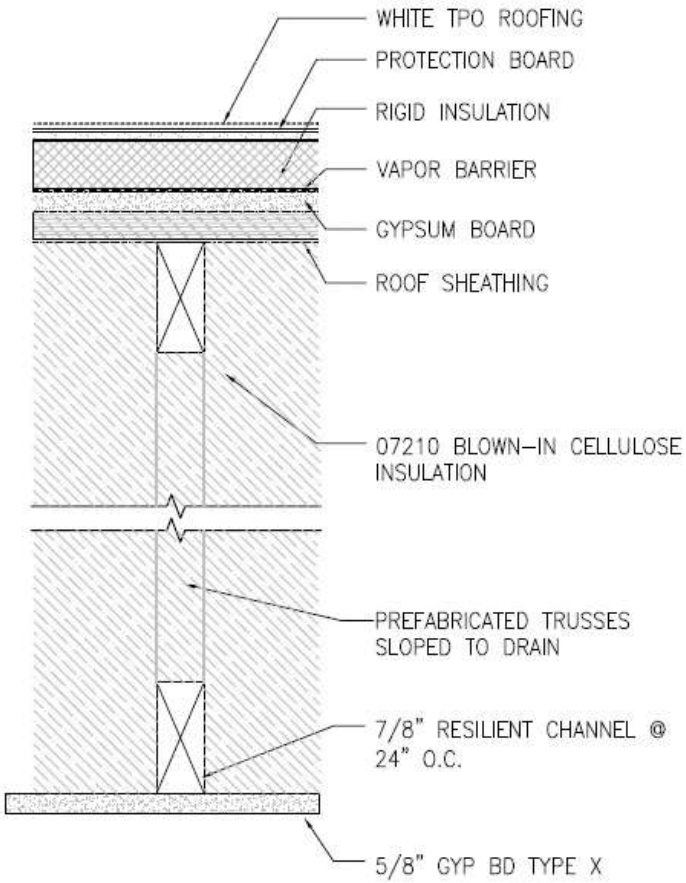

20 **ROOF ASSEMBLY**
UL: 1 HR. RATED

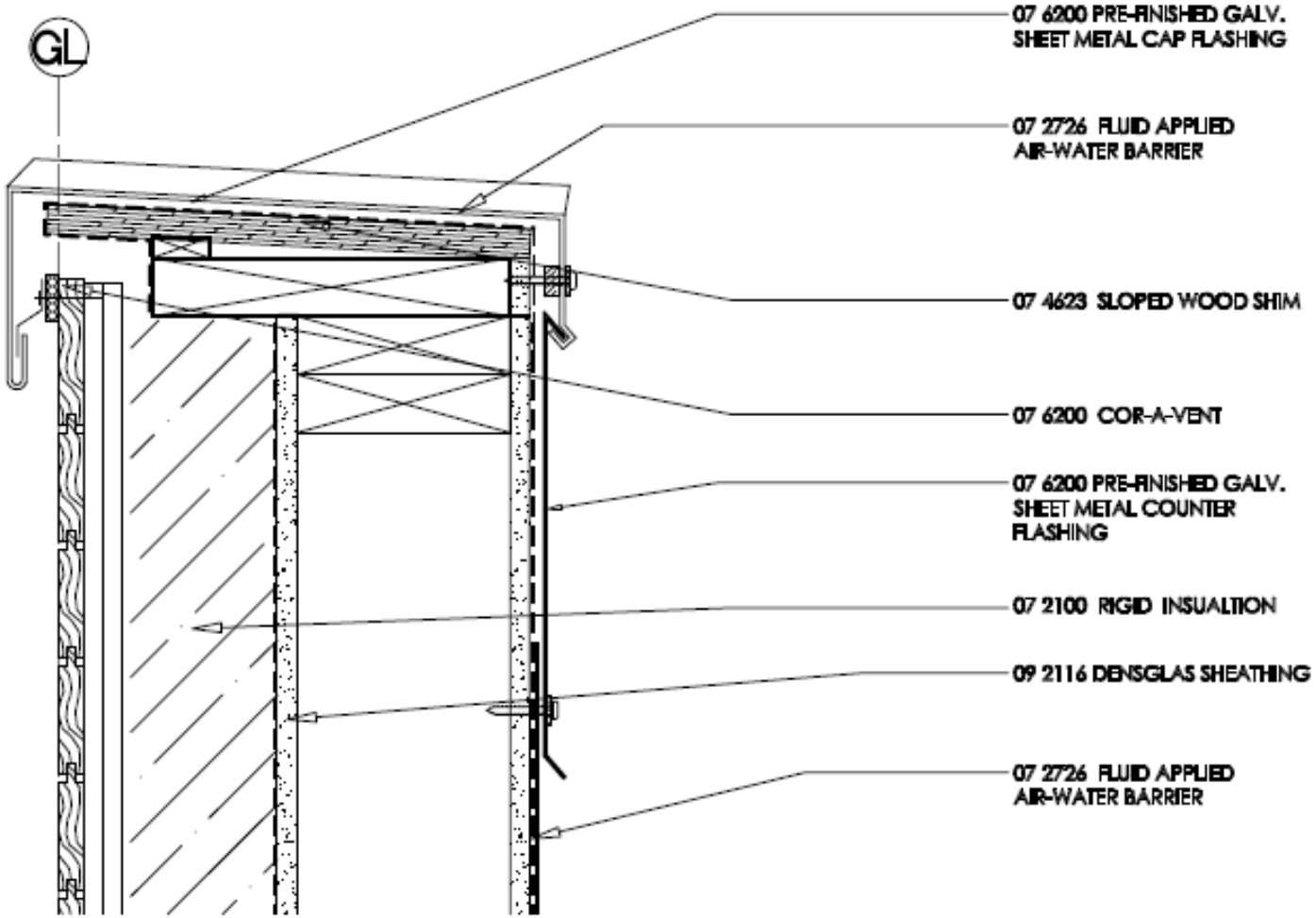
GL
07 6200 PRE-FINISHED GALV. SHEET METAL CAP FLASHING
07 2726 FLUID APPLIED AIR-WATER BARRIER
07 4623 SLOPED WOOD SHIM
07 6200 COR-A-VENT
07 6200 PRE-FINISHED GALV. SHEET METAL COUNTER FLASHING
07 2100 RIGID INSUALTION
09 2116 DENSGLAS SHEATHING
07 2726 FLUID APPLIED AIR-WATER BARRIER


Enhanced Performance Roof Hatches
Our Most Energy-Efficient Model Yet!
Bilco

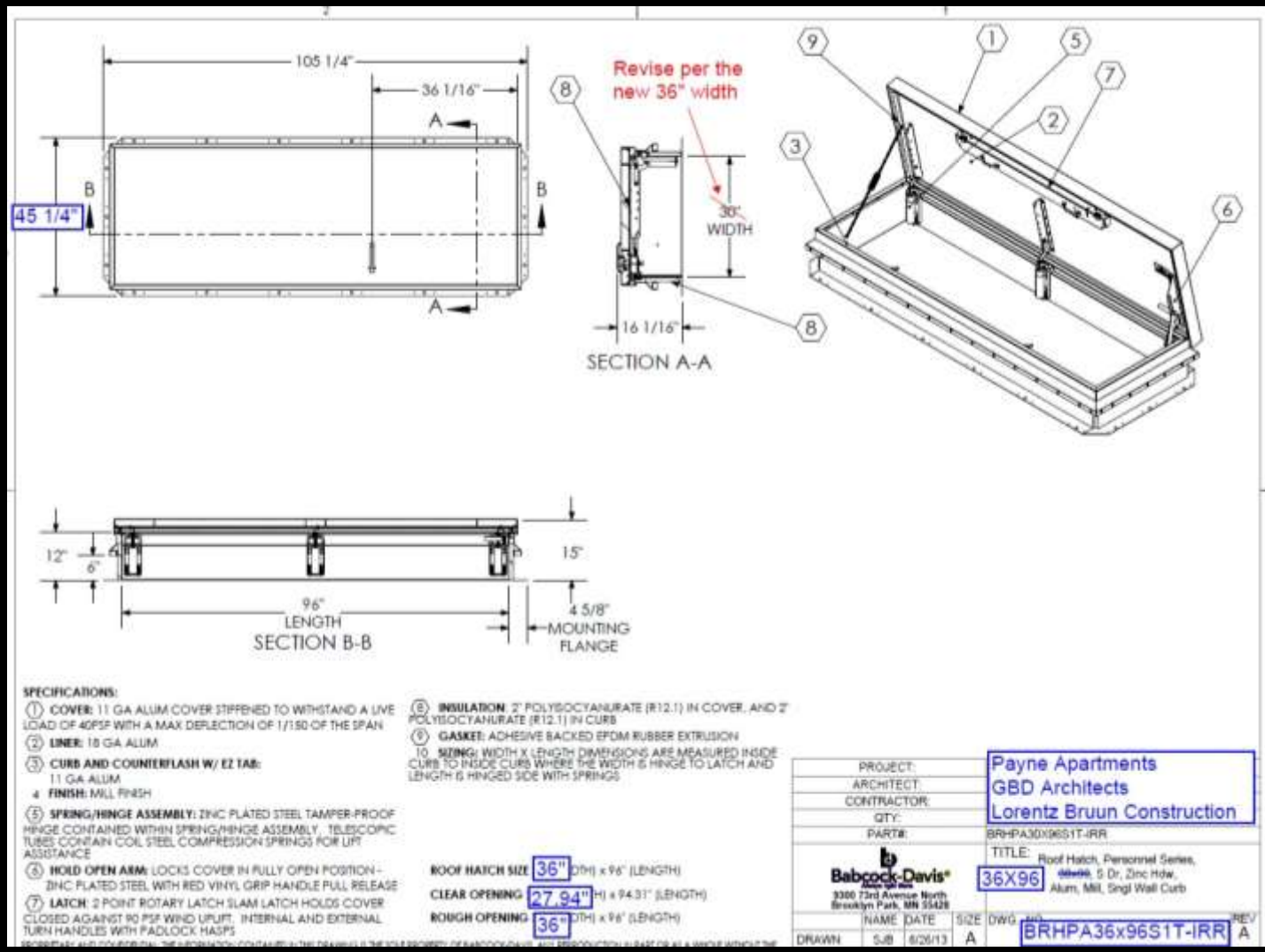
105 1/4"
36 1/16"
45 1/4"
A
B
Revise per the new 36" width
36" WIDTH
16 1/16"
SECTION A-A
12"
6"
15"
96" LENGTH
4 5/8" MOUNTING FLANGE
SECTION B-B
SPECIFICATIONS:
1 COVER: 11 GA ALUM COVER STIFFENED TO WITHSTAND A LIVE LOAD OF 40PSF WITH A MAX DEFLECTION OF 1/150 OF THE SPAN
2 LINER: 18 GA ALUM
3 CURB AND COUNTERFLASH W/ EZ TAB: 11 GA ALUM
4 FINISH: MILL FINISH
5 SPRING/HINGE ASSEMBLY: ZINC PLATED STEEL TAMPER-PROOF HINGE CONTAINED WITHIN SPRING/HINGE ASSEMBLY. TELESCOPIC TUBES CONTAIN COIL STEEL COMPRESSION SPRINGS FOR LIFT ASSISTANCE
6 HOLD OPEN ARM: LOCKS COVER IN FULLY OPEN POSITION - ZINC PLATED STEEL WITH RED VINYL GRIP HANDLE PULL RELEASE
7 LATCH: 2 POINT ROTARY LATCH SLAM LATCH HOLDS COVER CLOSED AGAINST 90 PSF WIND UPLIFT. INTERNAL AND EXTERNAL TURN HANDLES WITH PADLOCK HASPS
8 INSULATION: 2" POLYISOCYANURATE (R12.1) IN COVER, AND 2" POLYISOCYANURATE (R12.1) IN CURB
9 GASKET: ADHESIVE BACKED EPDM RUBBER EXTRUSION
10 SIZING: WIDTH X LENGTH DIMENSIONS ARE MEASURED INSIDE CURB TO INSIDE CURB WHERE THE WIDTH IS HINGE TO LATCH AND LENGTH IS HINGED SIDE WITH SPRINGS
ROOF HATCH SIZE 36" (DTH) x 96" (LENGTH)
CLEAR OPENING 27.94" (H) x 94.31" (LENGTH)
ROUGH OPENING 36" (DTH) x 96" (LENGTH)
PROJECT: Payne Apartments
ARCHITECT: GBD Architects
CONTRACTOR: Lorentz Bruun Construction
QTY:
PART#: BRHPA30X96S1T-IRR
Babcock-Davis
3300 73rd Avenue North
Brooklyn Park, MN 55428
TITLE: 36X96 Roof Hatch, Personnel Series, 5 Dr, Zinc Hdw, Alum, Mill, Sngl Wall Curb
NAME DATE SIZE
DRAWN SJB 6/26/13 A
DWG NO. BRHPA36x96S1T-IRR
REV A


eat


381123
SCH 498
BOX 3
POS 6
SEQ 55
IG89
HHWPAYNE23
#288
LBS

Kiln Apartments

Moisture Generation Rate Table

DATE: 10/9/2013

Generator	Generation Rate		Quant	Time	Units	Total	Units	Remarks
People	2.75 (lb/day/person)	2.75	1.5	14	hrs	2.41	lb/day)	Rate is the average between high and low
Animal (22 lb dog)	.015 (lb/hr)	0.015	1	24	hrs	0.27	lb/day)	Assume 75% of Apartments have a small dog
Animal – Cat	.004 (lb/hr)	0.004	0	0		0.00	lb/day)	Assume no cat
Plants	.033 (lb/hr/plant	0.033	5	24	hrs	3.96	lb/day)	Assume 5 plants on average per unit
Showers	.1 (lb/minute)	0.1	3	15	min	4.50	lb/day)	Assume (3) showers/ unit/day
Dishwashing	.55 (lb/load)		.5 /day	N/A		0.27	lb/day)	Assume dishwasher is run every other day
Cooking	.25 (lb/cooked meal)		1/day	NA		0.50	lb/day)	Assume 2 meals per day
Cooking Combustion	1 (lb/meal)		0	0		0.00	lb/day)	
Foundation Moisture	1 to 30 (lb/day)		0	0		0.00	lb/day)	
Laundry	Not given					0.25	lb/day)	Added .25 lb/day to account for added moisture
				TOTAL		12.16	lb/day)	
						0.51	lb/hr	TOTAL HOURLY RATE

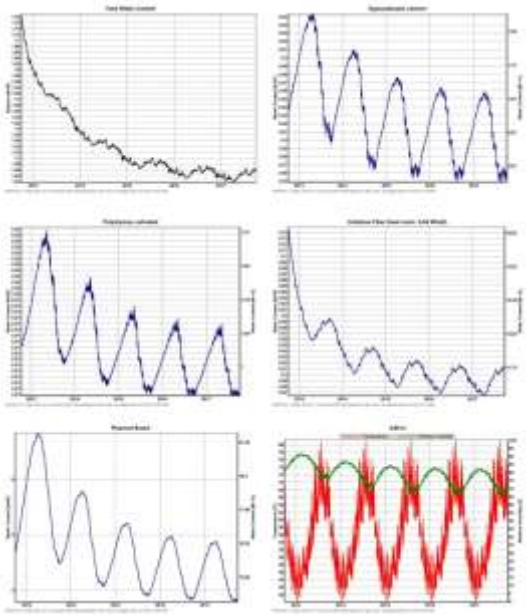

Some of the analysis necessary to understand moisture management at Kiln Apartments (Moisture Generation Table, On-site moisture testing of wood framing, hygrothermal model of roof system)

MOISTURE MANAGEMENT

Due to the high performing and very tight envelope of a passive house building, understanding moisture management is more involved. At Kiln, the team hired outside experts to run a number of moisture management scenarios to prove adequate drying of the building initially as well as over time.

GBD

The full building blower door test requires a complete envelope. This reduces some construction sequencing alternatives that a contractor typically has.

CONSTRUCTION SCHEDULE

A passive house must meet a stringent air tightness standard:

<0.60 ACH @ 50 Pa

To ensure that, a preliminary blower door test is typically performed after the envelope is complete (air tight), but before the insulation and drywall installation. As such, passing this test becomes critical path construction schedule milestone.

GBD

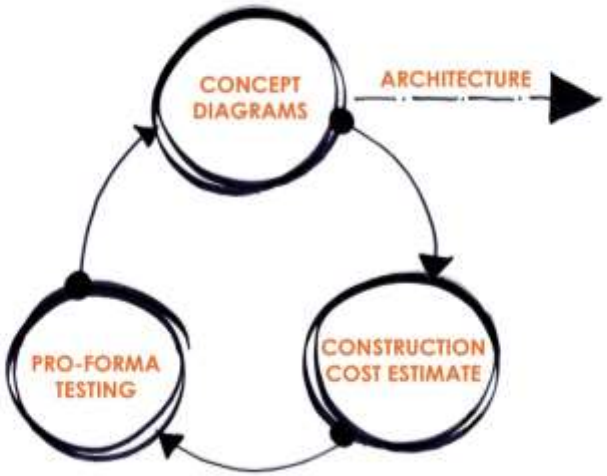

1. **Finding the right MEP systems requires more early analysis to avoid costly design revisions.**
2. **Pre-design / schematic design is more involved as it must include energy modeling.**
3. **Energy modeling is more involved and critical.**
4. **Construction administration requires more attention from the design team.**

GBD observations based on Kiln Apartments. Much of the process at Kiln can be attributed to it being the first time designing a Passive House, however, there are some elements of the design process that should evolve.

DESIGN PROCESS

Though Kiln is certainly an R&D effort for all involved, we have noticed a few areas that are different than GBD's "typical" design process.

From a developer's point of view, some of these items result in more design time than "typical" high performing standards such as LEED.

GBD

Q&A

GBD

GBD